The information hereon is the property of PLESSEY PERIPHERAL SYS. Transmittal receipt or possession of the information does not comply, license or imply any rights to use, sell, or manufacture from this information and no reproduction or publication of it, in whole or in part, shall be made without written authorization from PLESSEY PERIPHERAL SYS.

REVISIONS			
LTR	DESCRIPTION	DATE	APPROVED
A	Released to Production per EO 6336	11-19-80	[illegible]

APPLICATION	
NEXT ASSY	USED ON
701535-100	PM-11D

P/N 701295-1006 - 128 KBYTE

64K - 4 OFF

OK - 1-5 ON - 128K

PRODUCTION RELEASE

REV STATUS OF SHEETS								
	REV LTR							
	SHEET							
	REV LTR	A	A	A	A	A	A	A
	SHEET	1	2	3	4	5	6	7

DO NOT SCALE DRAWING

SCREW THREADS PER HANDBOOK H-28

COUNTERBORE AND SPOTFACE FILLET RADII TO BE .010 MAXIMUM

REMOVE ALL BURRS AND BREAK SHARP EDGES EQUIVALENT TO .010R

ROUGHNESS OF MACHINED SURFACES 125 PER USAS B46.1.

STANDARD HOLE TOLERANCE PER AND 10387

TOLERANCES ON: XX = ± .03 XXX = ± .010 ANGLES = ± 0° 30'

INTERPRET DIMENSIONS AND TOLERANCES PER USAS Y14.5

DIMENSIONS ARE IN INCHES AND APPLY AFTER HEAT TREAT AND FINISH

UNLESS OTHERWISE SPECIFIED

CONTRACT NO.		
DRAWN	M. Bodmann	11-19-80
CHECK	L. Tunkis	11-19-80
DESIGN	D W Tull	11-20-80
PROJ. ENGR	[illegible]	11-20-80
	R. Watt	11/20/80
OTHER APPROVALS		

Plessey Peripheral Systems

DWG TITLE

INSTALLATION PROCEDURE

PM-11D MEMORY MANAGEMENT UNIT

SIZE	CODE IDENT NO.	DWG NO.
A	52648	IP 701535

SCALE:

SHEET 1 OF 7

FORM 000020

DISTR NO

INSTALLATION PROCEDURE

PM-11D MEMORY MANAGEMENT UNIT

1.0 SCOPE

This document describes the procedure for installation of the PM-11D memory management unit manufactured by Plessey Peripheral Systems, Irvine, California 92714.

2.0 UNPACKING AND INSPECTION

Visually inspect the shipping container for any signs of damage. Open the shipping container, remove the packing material, and inspect the contants for damage. If the unit has been damaged in shipment, notify the transportation company immediately. Save the shipping container as evidence of damage for their inspection.

3.0 PREPARATION

Before starting to install the PM-11D be sure that the following equipment is available:

- Soldering iron (25-35 watt)
- Solder
- Diagonal cutters
- Medium, slot-type screwdriver
- Solder removal tool
- Alcohol
- Acid brush

4.0 PARTS

The following parts are supplied with the PM-11D:

- PM-11D memory management unit
- PM-11A stack limit module (optional)
- Capacitor - 680pF ±5%, 100V MICA
- Capacitor - 560pF ±5%, 100V MICA

...ie information hereon is the property of PLESSEY MEMORIES INCORPORATED. Transmittal, receipt, or possession of the information does not comply, license, or imply any rights to use, sell, or manufacture from this information and no reproduction or publication of it, in whole or part, shall be made without written authorization from PLESSEY MEMORIES, INC.

5.0 PROCESSOR PREPARATION

Refer to the PDP-11/35 or 11/40 system engineering drawings during installation.

Install the PM-11A stack limit module according to the instructions in the technical manual (MA 700405) provided with the unit.

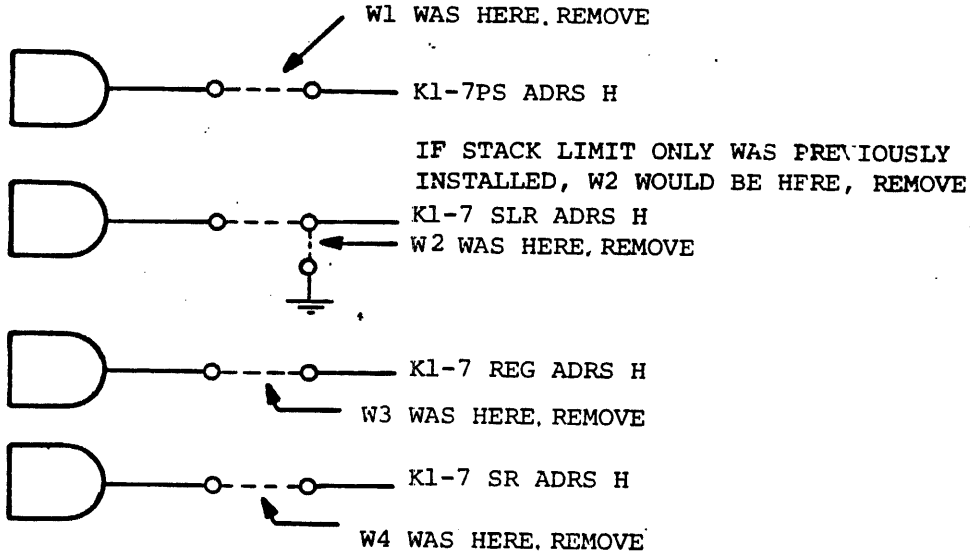

Remove the M7231 module from the processor. Alter the jumpers as described.

Remove jumpers W1, W2, W3, and W4 as illustrated. Refer to data paths K1-7.

The information hereon is the property of PLESSEY MEMORIES INCORPORATED. Transmittal, receipt, or possession of the information does not comply, license, or imply any rights to use, sell, or manufacture from this information and no reproduction or publication of it, in whole or part, shall be made without written authorization from PLESSEY MEMORIES, INC.

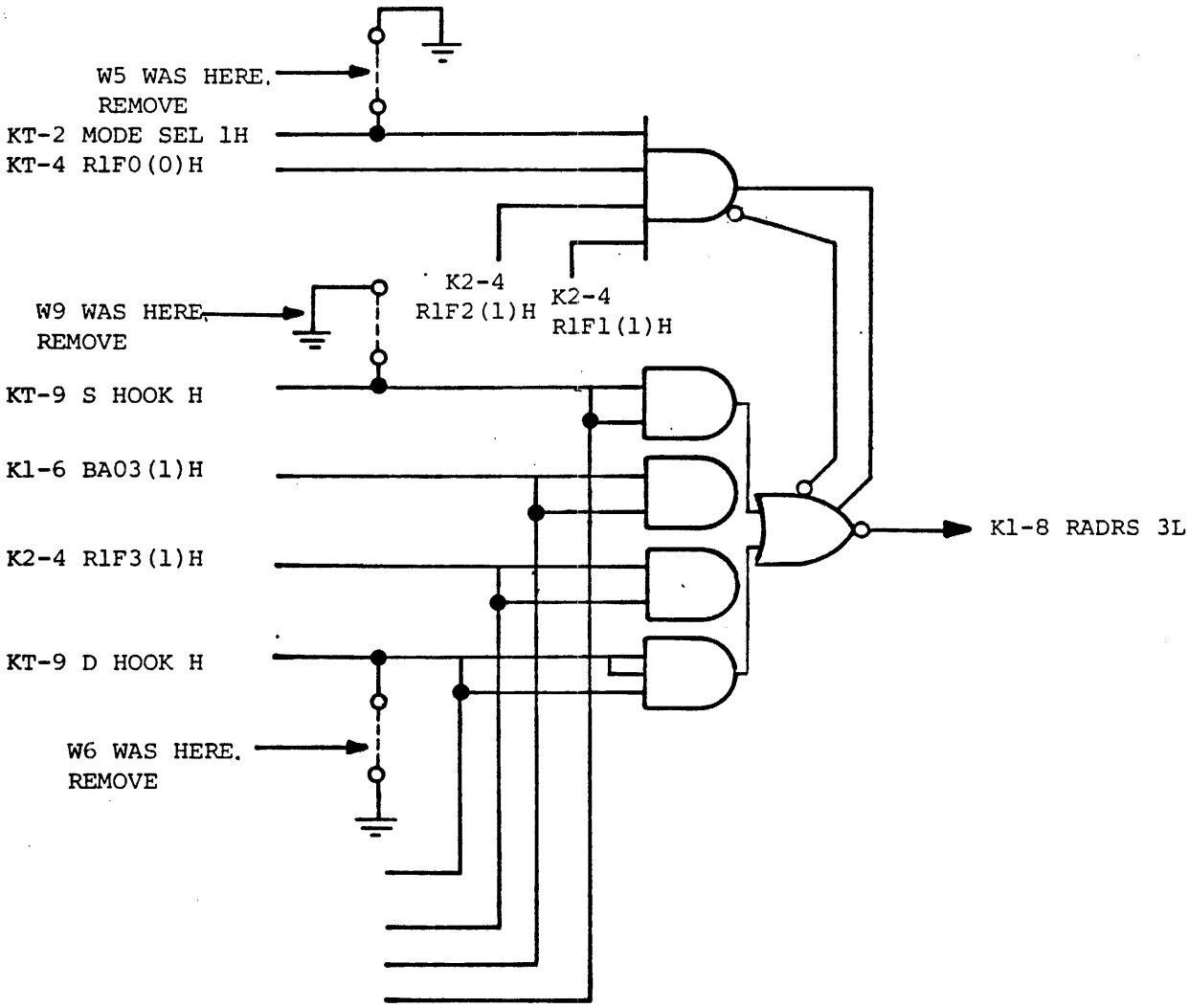

Remove jumpers W5, W6, and W9 as illustrated. Refer to data paths K1-8.

The information hereon is the property of PLESSEY MEMORIES INCORPORATED. Transmittal, receipt, or possession of the information does not comply, license, or imply any rights to use, sell, or manufacture from this information and no reproduction or publication of it, in whole or part, shall be made without written authorization from PLESSEY MEMORIES, INC.

SIZE	CODE IDENT NO.	DWG NO.
A	52648	IP 701535
SCALE	REV A	SHEET 4

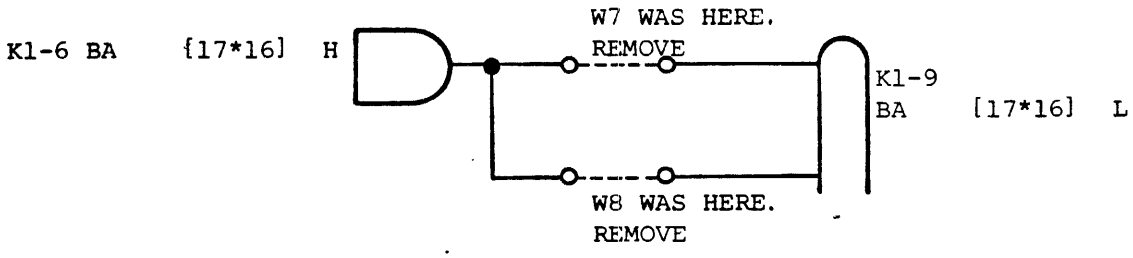

Remove jumpers W7 and W8. Refer to data paths K1-9.

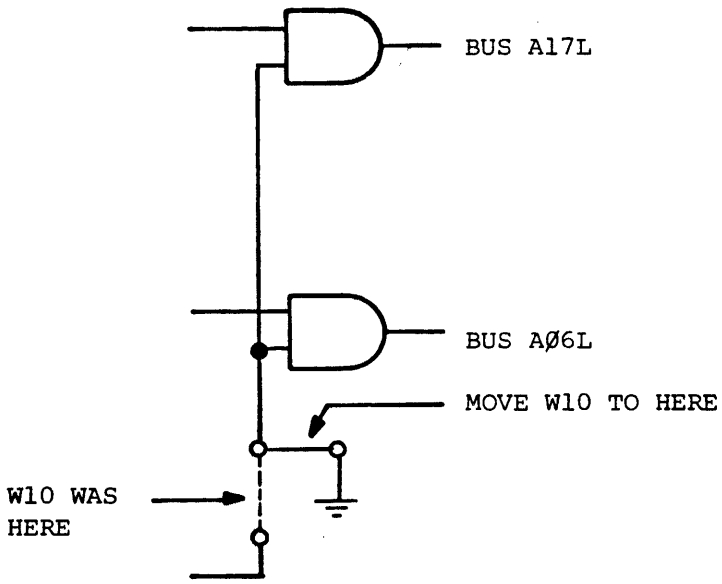

Move jumper W10 as shown. Refer to data paths K1-6.

The information hereon is the property of PLESSEY MEMORIES INCORPORATED. Transmittal, receipt, or possession of the information does not comply, license, or imply any rights to use, sell, or manufacture from this information and no reproduction or publication of it, in whole or part, shall be made without written authorization from PLESSEY MEMORIES, INC.

SIZE	CODE IDENT NO.	DWG NO.
A	52648	IP 701535
SCALE	REV A	SHEET 5

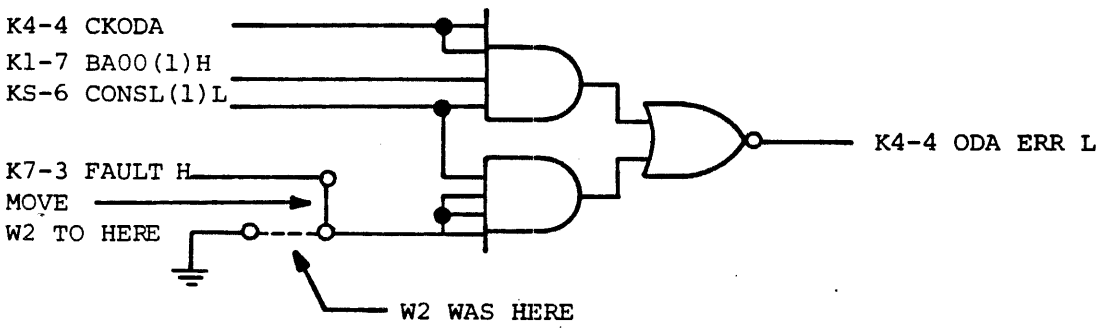

Remove the M7234 card from the processor.

Move jumper W2 as shown. Refer to timing BUS DATA CNTL, K4-4.

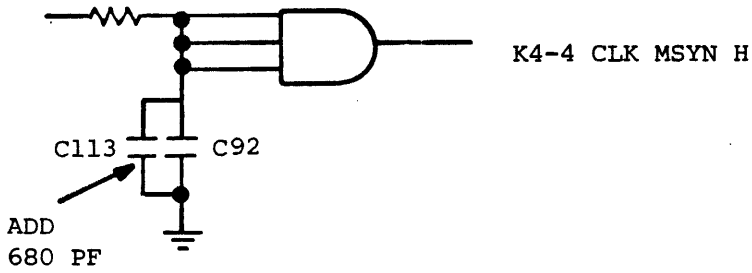

Install the 680pF capacitor in location C113 as illustrated.

NOTE: On early revision boards this capacitor was located at C107. Check your prints.

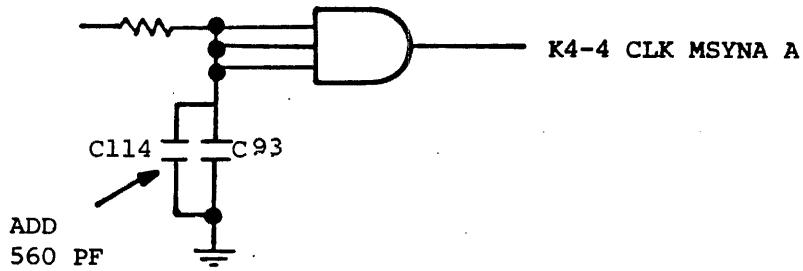

Install the 560pF capacitor in location C114 as illustrated.

NOTE: On early revision boards this capacitor was located at C106. Check your prints.

The information hereon is the property of PLESSEY MEMORIES INCORPORATED. Transmittal, receipt, or possession of the information does not comply, license, or imply any rights to use, sell, or manufacture from this information and no reproduction or publication of it, in whole or part, shall be made without written authorization from PLESSEY MEMORIES, INC.

SIZE	CODE IDENT NO.	DWG NO.
A	52648	IP 701535
SCALE	REV A	SHEET 6

Clean solder joints with alcohol.

Install M7231 and M7234 modules back into the CPU.

Install the PM-11D board into slot.

6.0 CHECKOUT

When installation is complete, it is recommended that the unit be checked out using the following diagnostics:

ZP103-RB	KT11D document and papertape kit
MDEC-11-DBKTA-C-D-PB	Basic logic test document, binary papertape
MDEC-11-DBKTB-A-D-PB	Access keys test document, binary papertape
MDEC-11-DBKTC-A-D-PB	MTPI/MFPI with memory management test document, binary papertape
MDEC-11-DBKTD-A-D-PB	Processor states test document, binary papertape
MDEC-11-DCKBF-A1-D-A2-PB	Stack limit test document, binary papertape
MDEC-11-DBKTG-C-D-PB	Exerciser document, binary papertape
MDEC-11-DBKTF-B-D-PB	Memory management abort tests document, binary papertape.

The information hereon is the property of PLESSEY MEMORIES INCORPORATED. Transmittal, receipt, or possession of the information does not comply, license, or imply any rights to use, sell, or manufacture from this information and no reproduction or publication of it, in whole or part, shall be made without written authorization from PLESSEY MEMORIES, INC.