lenovo联想

M700 Series

Setup Sheet

www.lenovo.com

* X X X X X X X *

1 Unpack the printer.

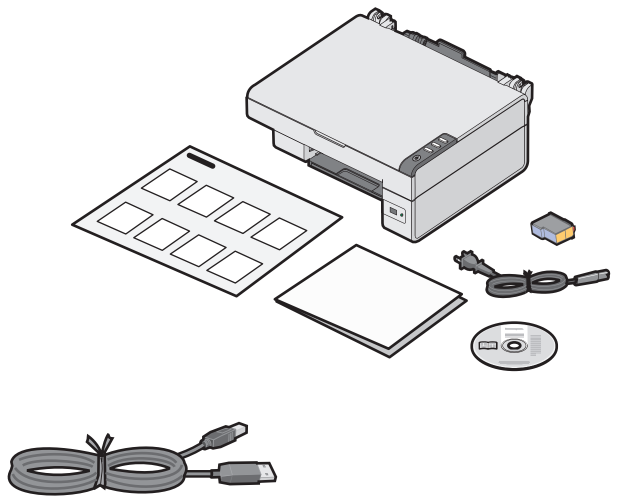

2 Prepare the printer.

1

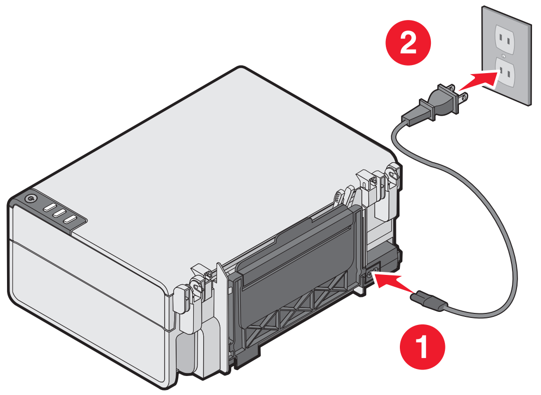

2

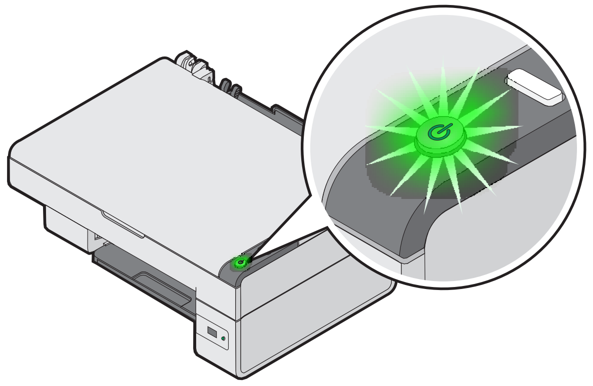

3

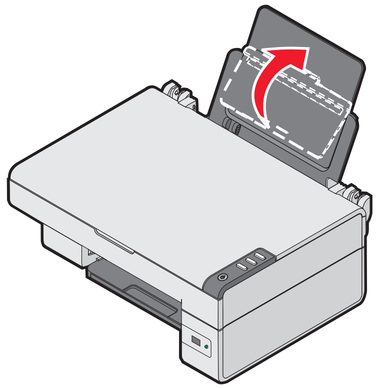

4

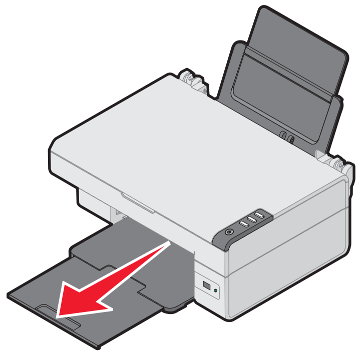

3 Load paper.

1

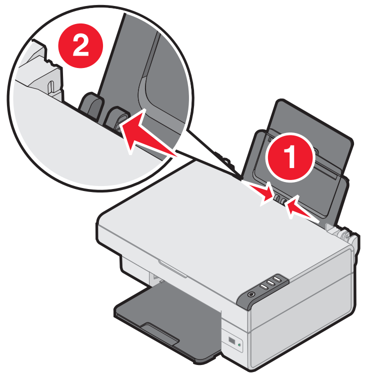

2

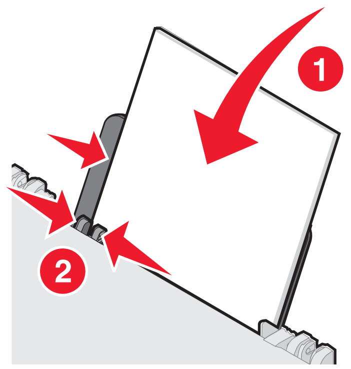

4 Install the print cartridge.

1

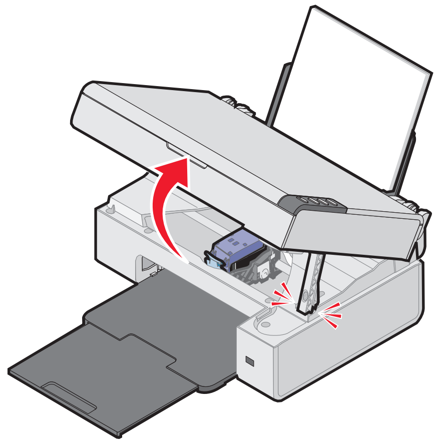

2

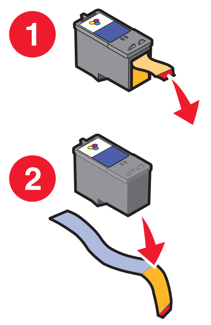

3

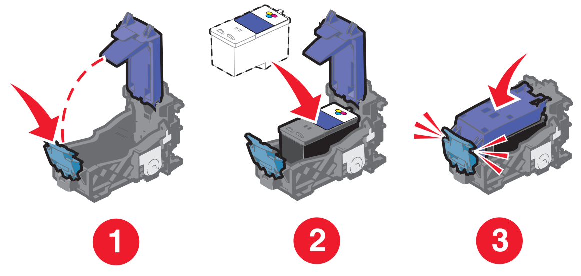

4

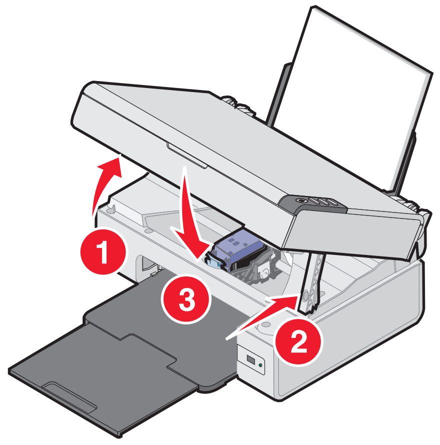

P/N XXXXXXX E.C. 6V0016A

© 2006 Lenovo (Beijing) Ltd. All rights reserved.

5 Install the software.

1

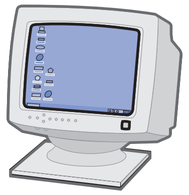

2

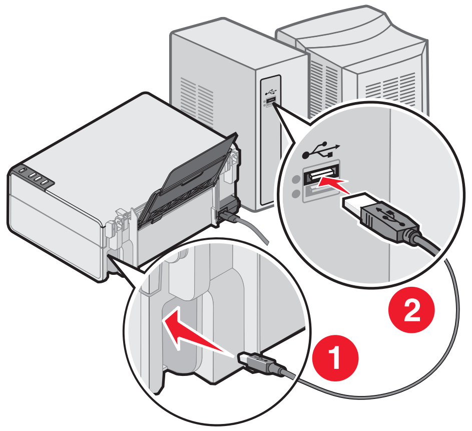

3

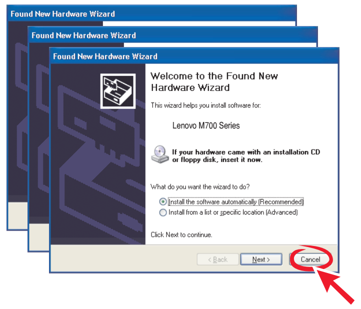

Welcome to the Found New Hardware Wizard

This wizard helps you install software for:

Lenovo M700 Series

If your hardware came with an installation CD or floppy disk, insert it now.

What do you want the wizard to do?

● Install the software automatically (Recommended)
○ Install from a list or specific location (Advanced)

Click Next to continue.

Windows 2000/XP

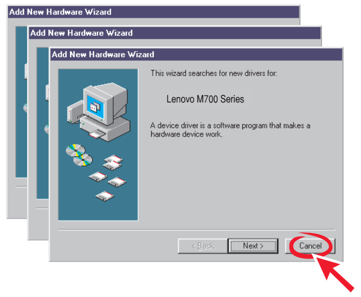

This wizard searches for new drivers for:

Lenovo M700 Series

A device driver is a software program that makes a hardware device work.

Windows 98/Me

4

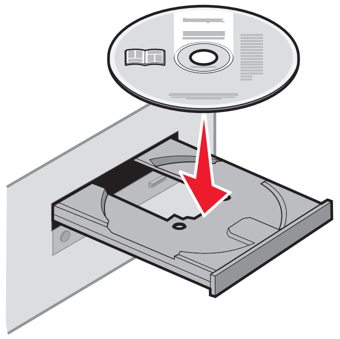

5

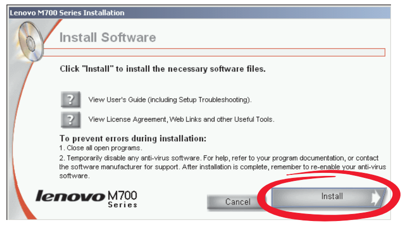

Install Software

Click "Install" to install the necessary software files.

View User's Guide (including Setup Troubleshooting).

View License Agreement, Web Links and other Useful Tools.

To prevent errors during installation:

1. Close all open programs.
2. Temporarily disable any anti-virus software. For help, refer to your program documentation, or contact the software manufacturer for support. After installation is complete, remember to re-enable your anti-virus software.

Need ink?

33

Safety Information

- Use only the power supply and power supply cord provided with this product or the manufacturer's authorized replacement power supply and power cord.
- Connect the power supply cord to an electrical outlet that is near the product and easily accessible.
- Refer service and repairs, other than those described in the user documentation, to a professional service person.

CAUTION: Do not set up this product or make any electrical or cabling connections, such as the power supply cord, during a lightning storm.

Safety Information

- Use only the power supply and power supply cord provided with this product or the manufacturer's authorized replacement power supply and power cord.
- Connect the power supply cord to an electrical outlet that is near the product and easily accessible.
- Refer service and repairs, other than those described in the user documentation, to a professional service person.

CAUTION: Do not set up this product or make any electrical or cabling connections, such as the power supply cord, during a lightning storm.

Safety Information

- Use only the power supply and power supply cord provided with this product or the manufacturer's authorized replacement power supply and power cord.
- Connect the power supply cord to an electrical outlet that is near the product and easily accessible.
- Refer service and repairs, other than those described in the user documentation, to a professional service person.

CAUTION: Do not set up this product or make any electrical or cabling connections, such as the power supply cord, during a lightning storm.

Safety Information

- Use only the power supply and power supply cord provided with this product or the manufacturer's authorized replacement power supply and power cord.
- Connect the power supply cord to an electrical outlet that is near the product and easily accessible.
- Refer service and repairs, other than those described in the user documentation, to a professional service person.

CAUTION: Do not set up this product or make any electrical or cabling connections, such as the power supply cord, during a lightning storm.

Safety Information

- Use only the power supply and power supply cord provided with this product or the manufacturer's authorized replacement power supply and power cord.
- Connect the power supply cord to an electrical outlet that is near the product and easily accessible.
- Refer service and repairs, other than those described in the user documentation, to a professional service person.

CAUTION: Do not set up this product or make any electrical or cabling connections, such as the power supply cord, during a lightning storm.

Safety Information

- Use only the power supply and power supply cord provided with this product or the manufacturer's authorized replacement power supply and power cord.
- Connect the power supply cord to an electrical outlet that is near the product and easily accessible.
- Refer service and repairs, other than those described in the user documentation, to a professional service person.

CAUTION: Do not set up this product or make any electrical or cabling connections, such as the power supply cord, during a lightning storm.

Safety Information

- Use only the power supply and power supply cord provided with this product or the manufacturer's authorized replacement power supply and power cord.
- Connect the power supply cord to an electrical outlet that is near the product and easily accessible.
- Refer service and repairs, other than those described in the user documentation, to a professional service person.

CAUTION: Do not set up this product or make any electrical or cabling connections, such as the power supply cord, during a lightning storm.

Safety Information

- Use only the power supply and power supply cord provided with this product or the manufacturer's authorized replacement power supply and power cord.
- Connect the power supply cord to an electrical outlet that is near the product and easily accessible.
- Refer service and repairs, other than those described in the user documentation, to a professional service person.

CAUTION: Do not set up this product or make any electrical or cabling connections, such as the power supply cord, during a lightning storm.

Safety Information

- Use only the power supply and power supply cord provided with this product or the manufacturer's authorized replacement power supply and power cord.
- Connect the power supply cord to an electrical outlet that is near the product and easily accessible.
- Refer service and repairs, other than those described in the user documentation, to a professional service person.

CAUTION: Do not set up this product or make any electrical or cabling connections, such as the power supply cord, during a lightning storm.