Direct Attach Multiple Cluster Configuration

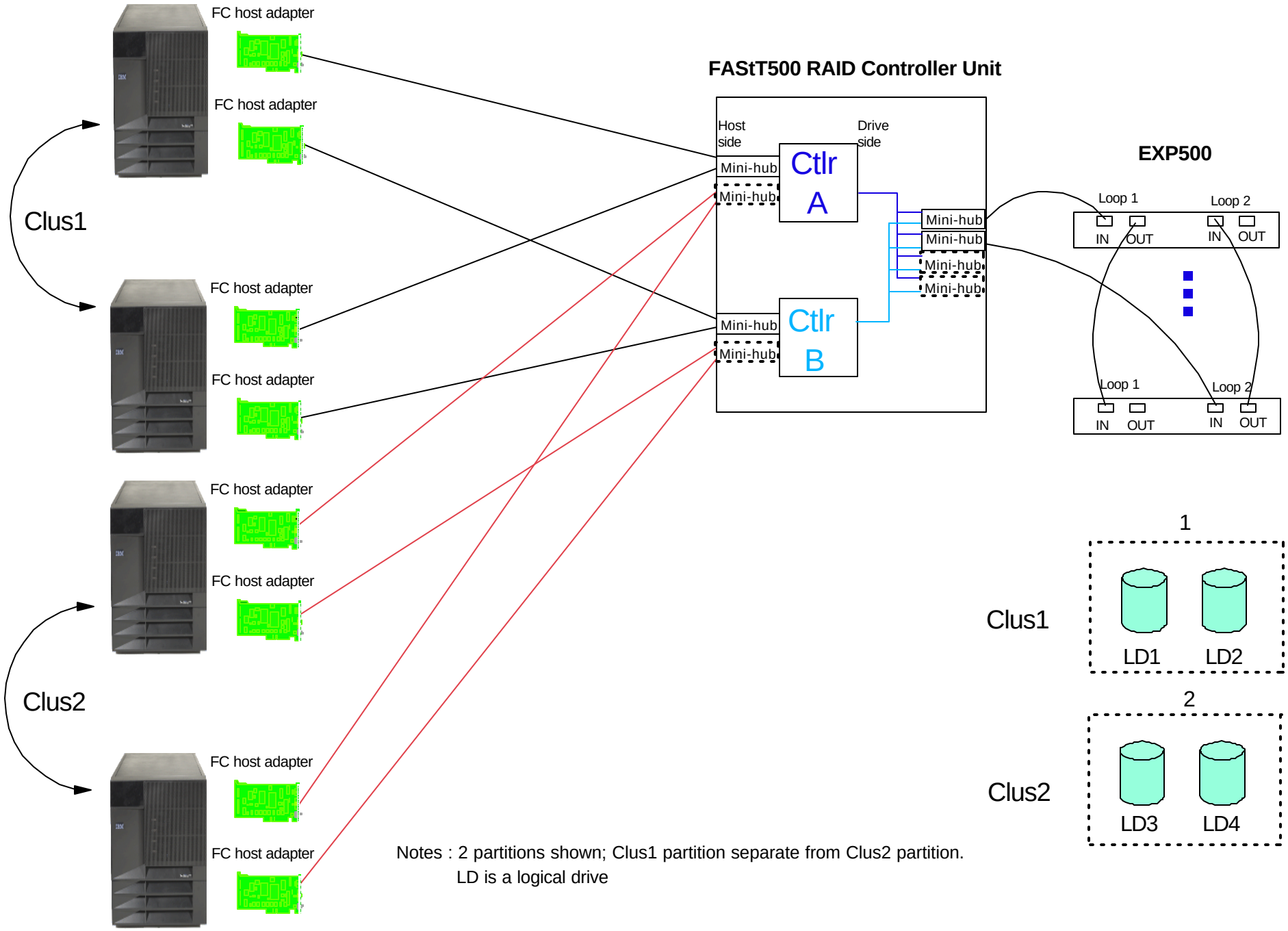

Notes : 2 partitions shown; Clus1 partition separate from Clus2 partition.
LD is a logical drive